THE UNIVERSITY OF AZAD JAMMU & KASHMIR, MUZAFFARABAD

COURSE TITLE	CALD
COURSE CODE	CS-1205
LAB TITLE	ENCODERS / DECODERS
STUDENT NAME	HASEEB SHEIKH
STUDENT ROLL NUMBER	2024-SE-31
INSTRUCTOR NAME	ENGR. SIDRA RAFIQUE
SUBMISSION DATE	AUG 19, 2025

DEPARTMENT OF SOFTWARE ENGINEERING

CALD

Lab 7

Objective:

This experiment aims to demonstrate the working of the decoders as well as the working of the Encoders.

Decoders

A decoder is a combinational logic circuit that converts an *n-bit binary input* into up to 2^n unique output lines.

2: 4 Decoder

Block diagram:

- Activates one of 4 outputs based on 2-bit input

Truth Table:

Input A	Input B	Output D0	Output D1	Output D2	Output D3
0	0	1	0	0	0
0	1	0	1	0	0
1	0	0	0	1	0
1	1	0	0	0	1

Output Expressions:

Output	Expression
D0	$A' \cdot B'$
D1	$A' \cdot B$
D2	$A \cdot B'$
D3	$A \cdot B$

Implementation:

- **First Combination**

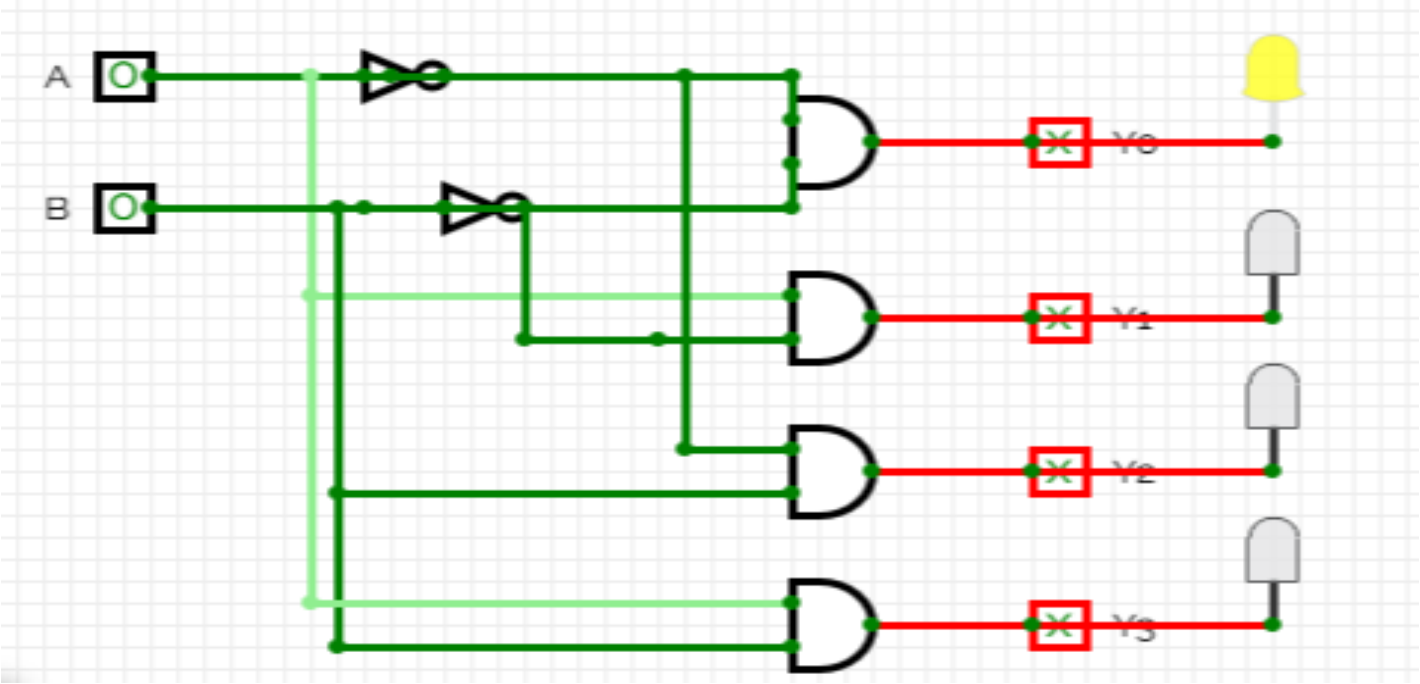

- **Second Combination**

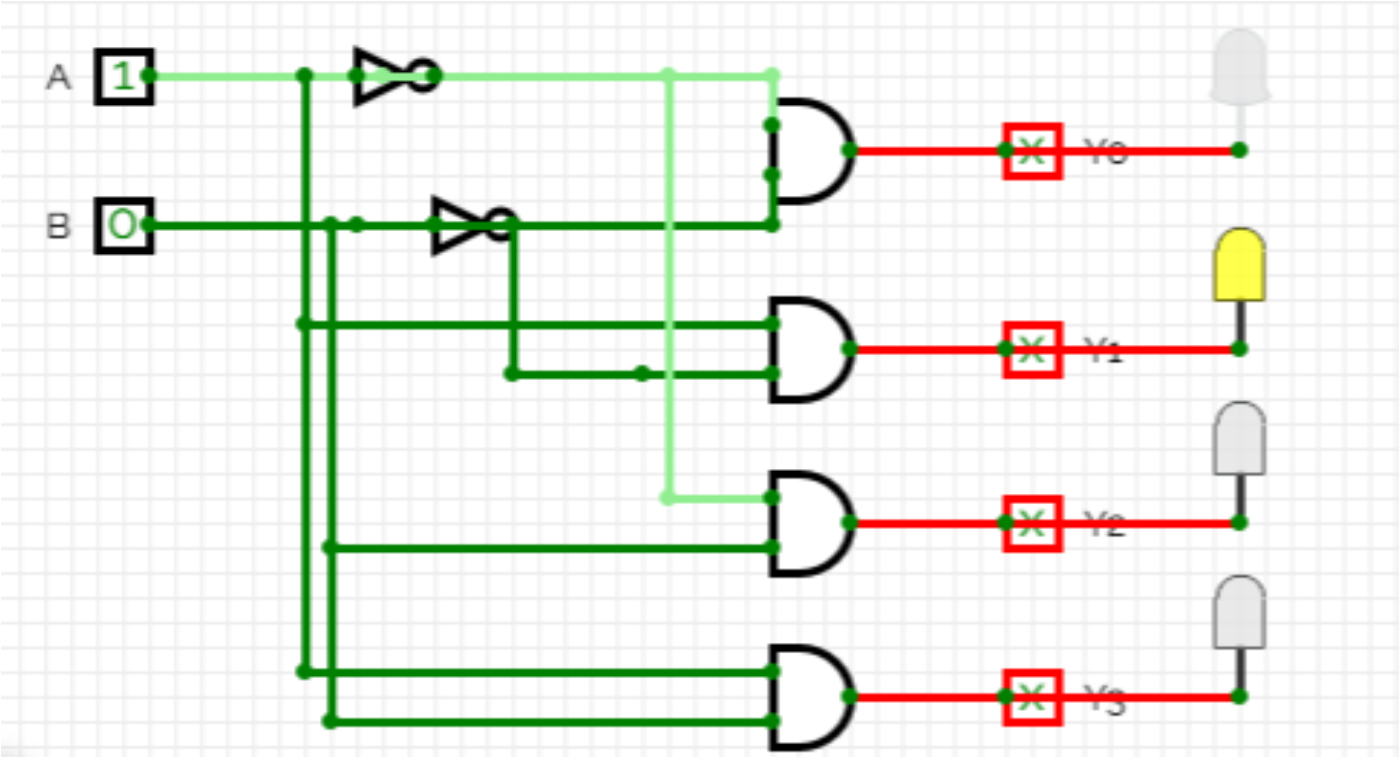

- **Third Combination**

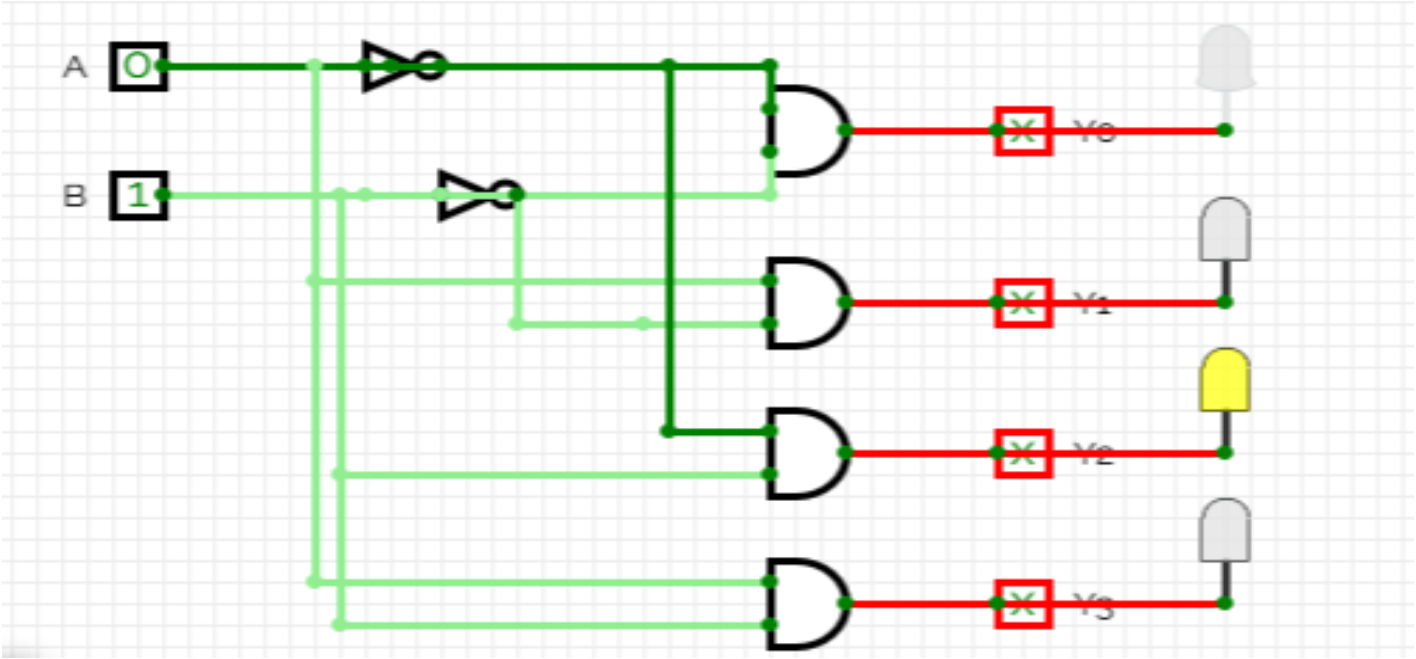

- **Fourth Combination**

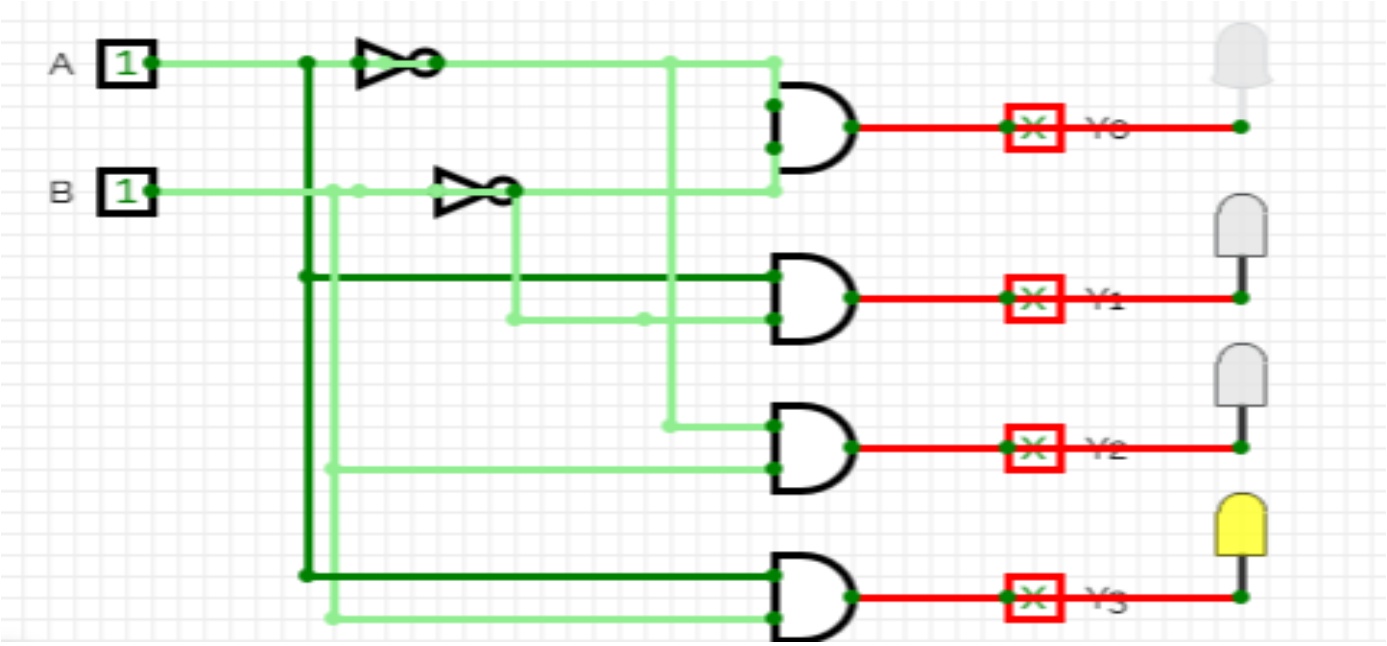

3: 8 Decoder

Using an Integrated Circuit

Block diagram:

Truth Table:

A2	A1	A0	D0	D1	D2	D3	D4	D5	D6	D7
0	0	0	1	0	0	0	0	0	0	0
0	0	1	0	1	0	0	0	0	0	0
0	1	0	0	0	1	0	0	0	0	0
0	1	1	0	0	0	1	0	0	0	0
1	0	0	0	0	0	0	1	0	0	0
1	0	1	0	0	0	0	0	1	0	0
1	1	0	0	0	0	0	0	0	1	0
1	1	1	0	0	0	0	0	0	0	1

Boolean Expressions:

Output	Expression
D0	A2′ · A1′ · A0′
D1	A2′ · A1′ · A0
D2	A2′ · A1 · A0′
D3	A2′ · A1 · A0
D4	A2 · A1′ · A0′
D5	A2 · A1′ · A0
D6	A2 · A1 · A0′
D7	A2 · A1 · A0

Implementation:

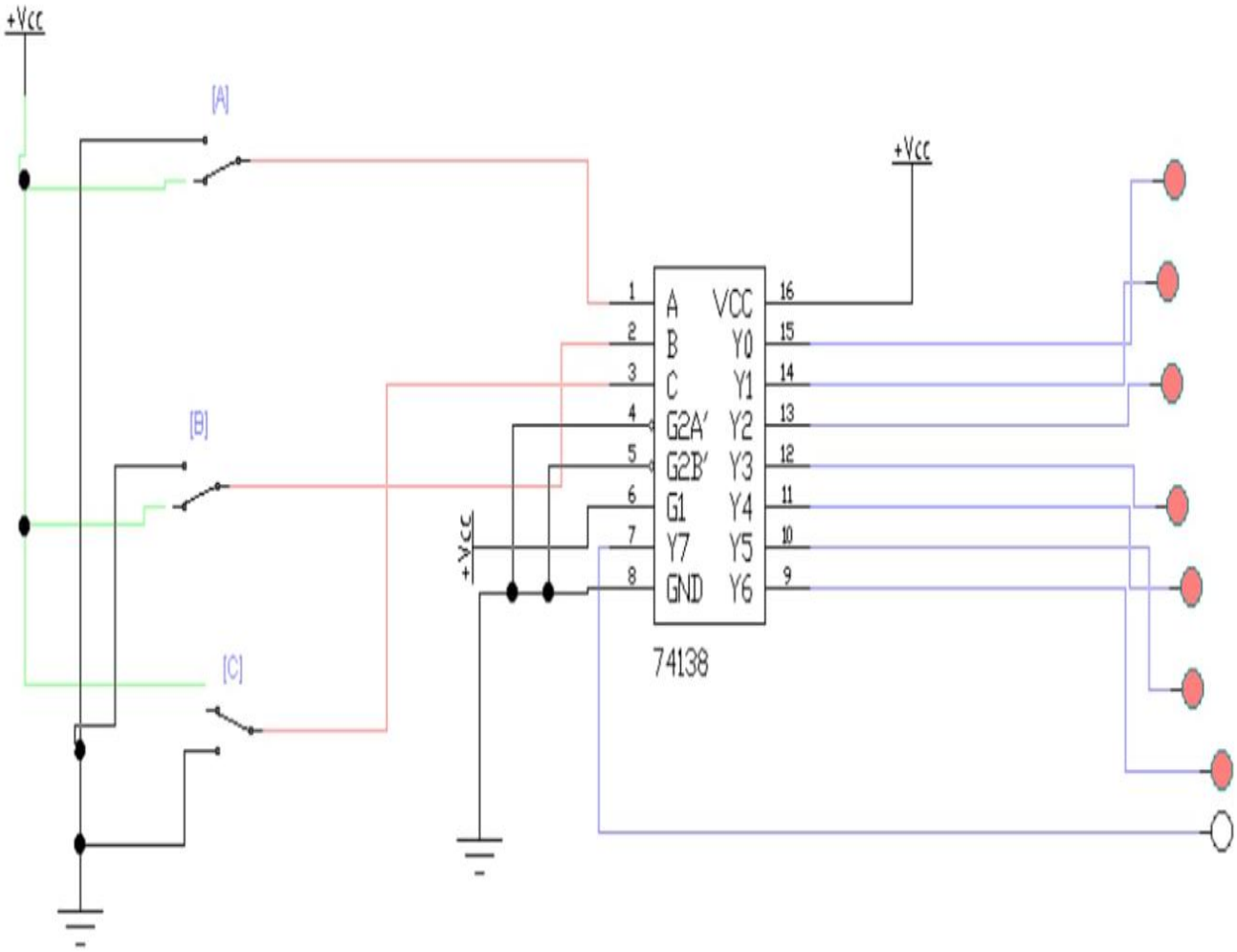

Encoders

An encoder is a combinational logic circuit that converts one of several active input signals into a binary code at the output.

4: 2 Line Encoder

Block diagram:

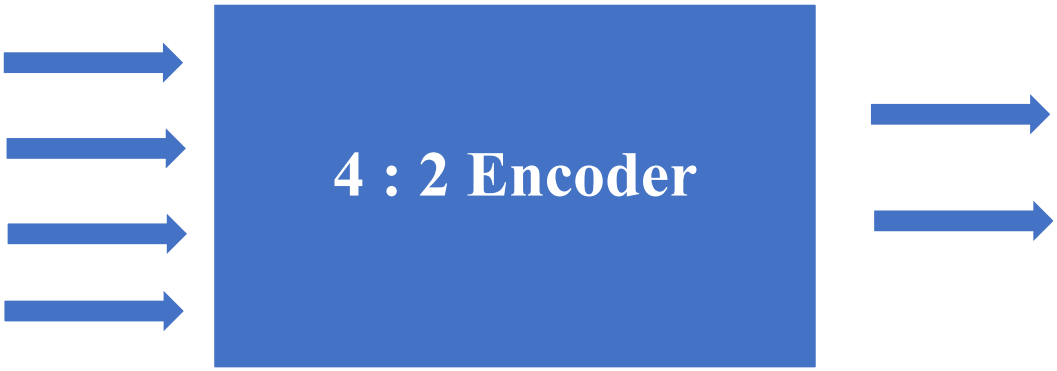

Truth Table:

Input D3	Input D2	Input D1	Input D0	Output A1	Output A0
0	0	0	1	0	0
0	0	1	0	0	1
0	1	0	0	1	0
1	0	0	0	1	1

Output Expression:

Output	Expression
A1	D2 + D3
A0	D1 + D3

Implementation:

checking all the combinations one by one.

- ## First combination
  - Input D0 = 1

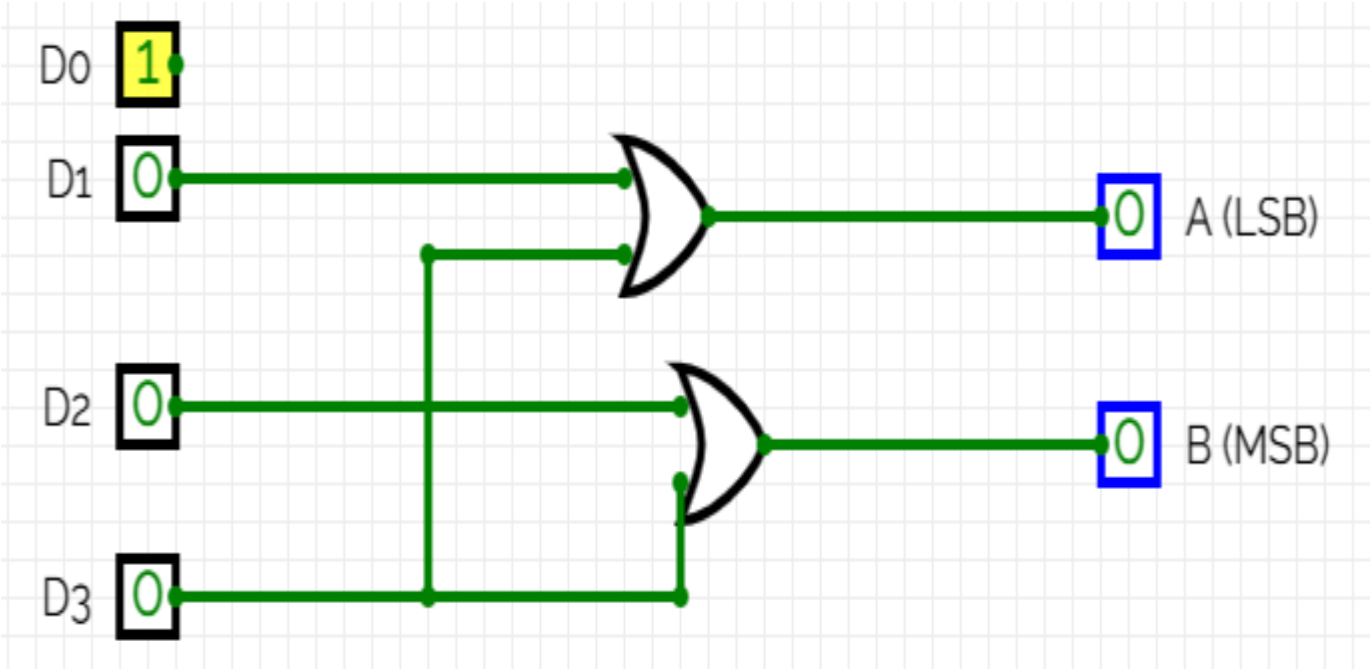

- ## Second combination
  - Input D1 = 1

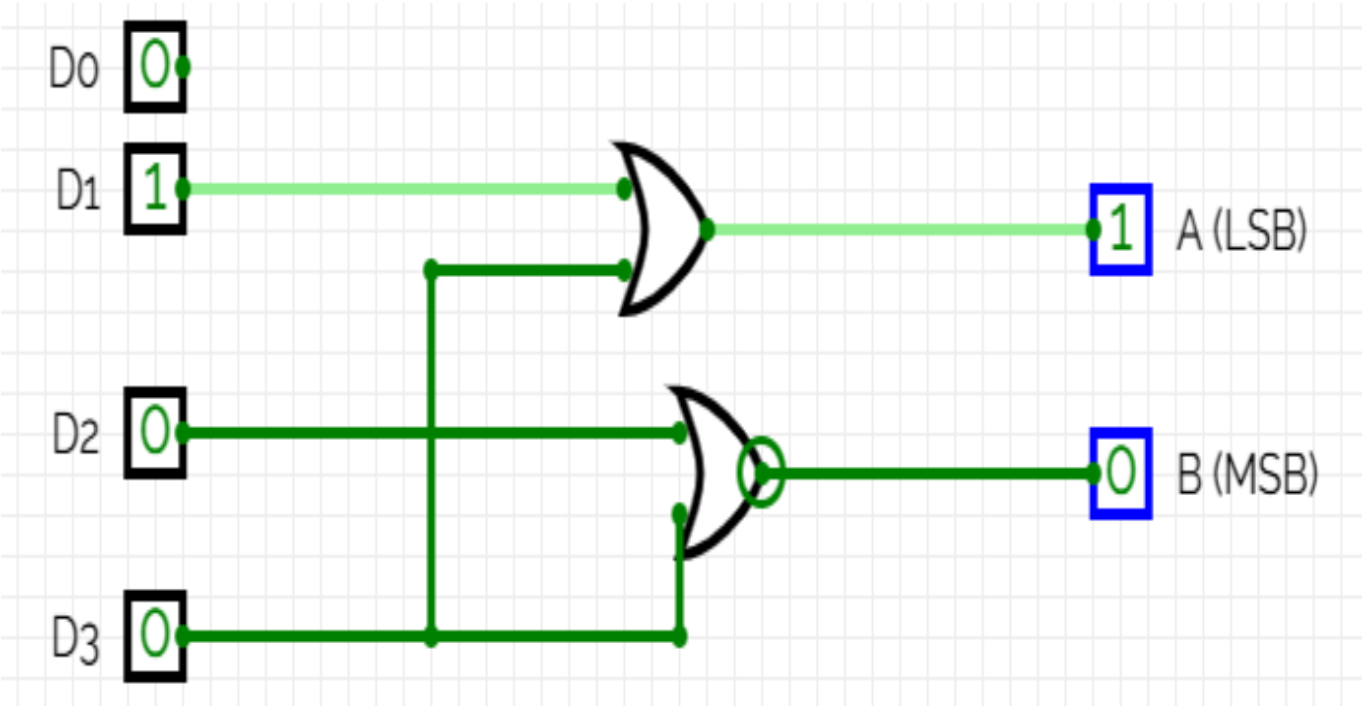

- ## Third combination
- Input D2 = 1

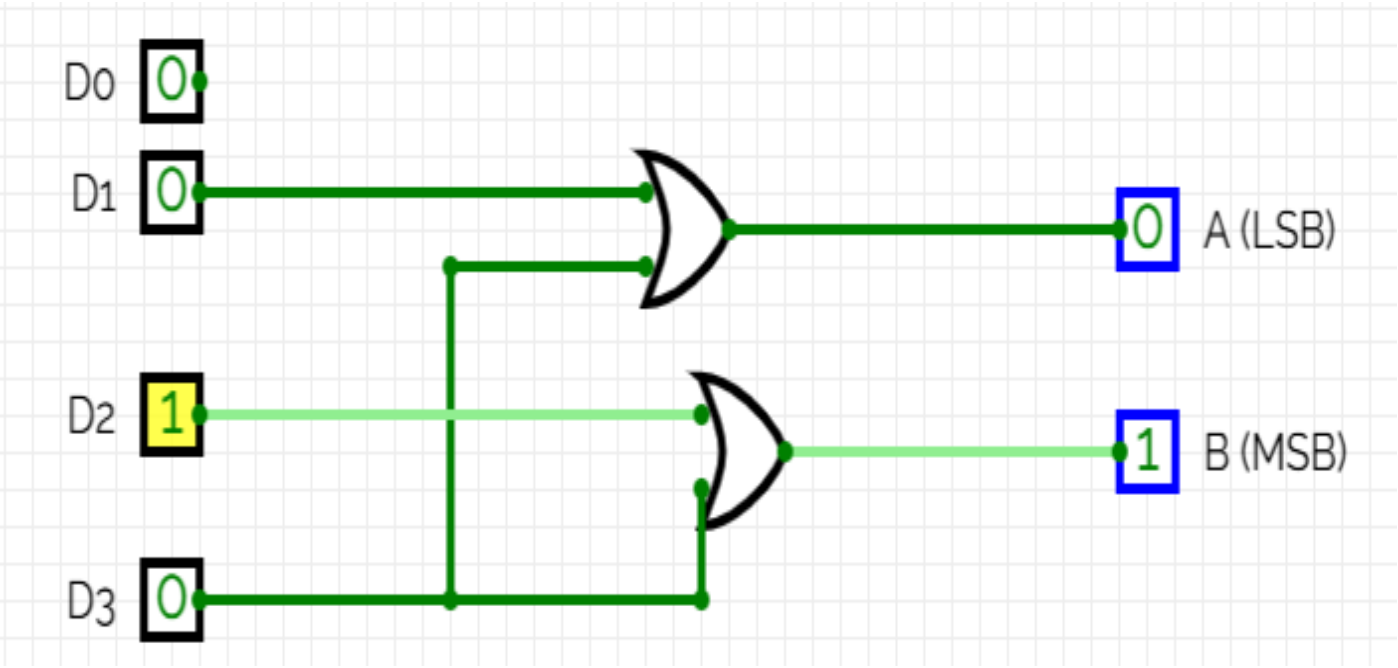

▪ Fourth combination
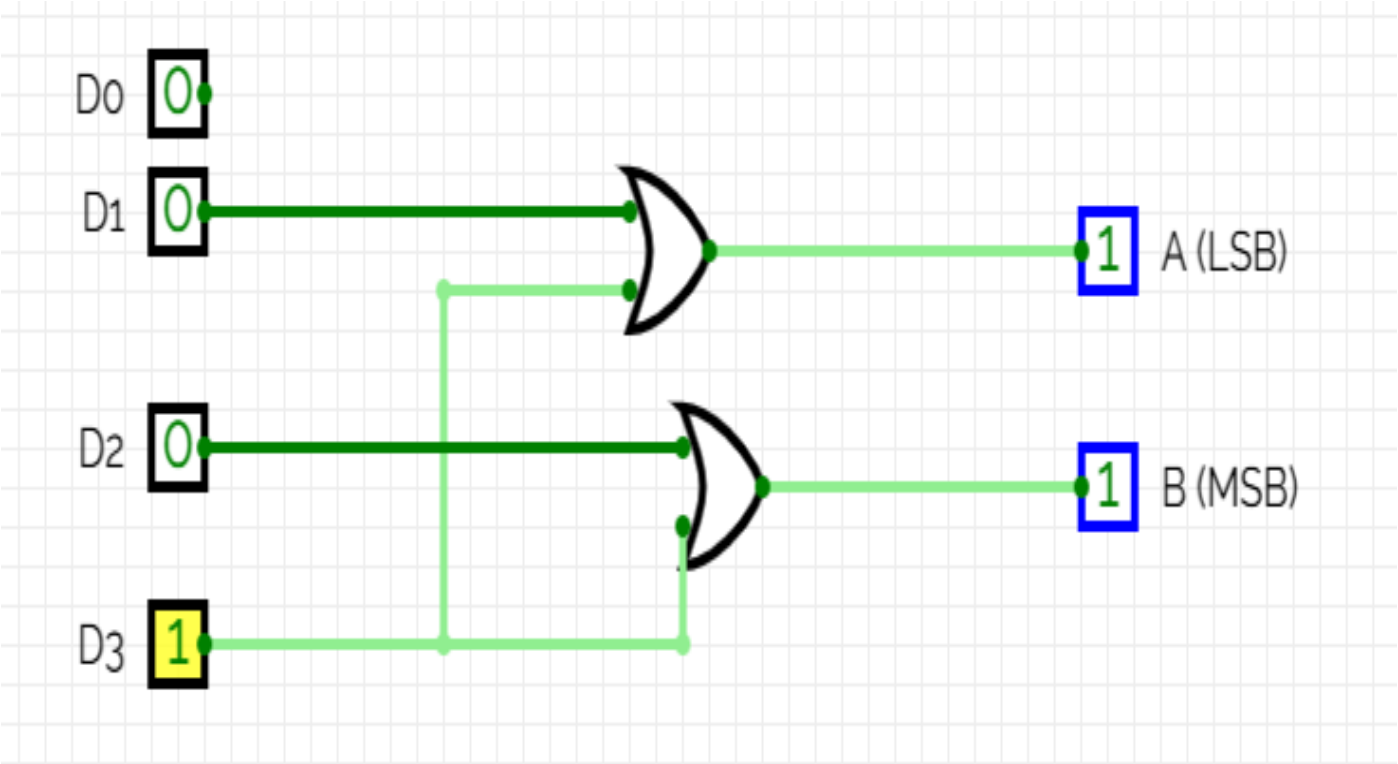
- Input D3 = 1